SCR SERIES Commercial Lighting

SCR-32D-MCTP-D

LED ARCHITECHTURAL 24in ROUND SUSPENDED LIGHT

MCTP Multi Color Temperature & Multi Power/Wattage (Selectable)

WESTGATE

THE FUTURE IS HERE...AND IT'S QUITE BRIGHT!

Customer Name:

Project Name:

Note: | Type:

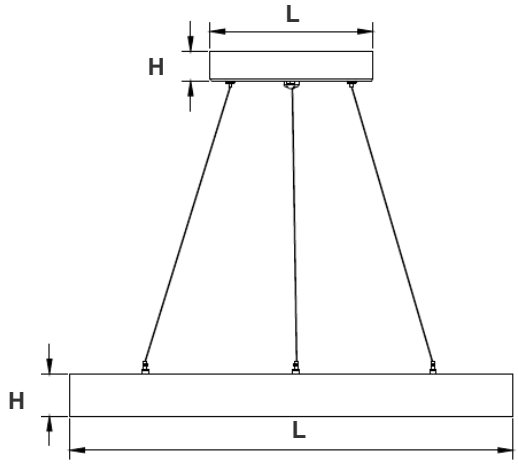

A modern decorative Euro-design suspended light suitable for conference tables, creative offices and department stores.

Canopy Dimension: 8 3/5"(L) x 2 1/2"(H)
Fixture Dimension: 32"(L) x 2 1/4"(H)

Features

- LED Superior Architectural Lights
- Aluminum Housing With Sandy White Finish
- MCTP: Multi Color Temperature and Power (Selectable, the switches are inside the Canopy)
- 5-Year Warranty

Technical Specifications

Electrical:

- Voltage: 120-277V AC 50/60Hz
- Wattage: 40W/60W/80W
- Power Factor: >0.98
- LPW: 110 LM/W
- Total Harmonic Distortion: ≤19 %

Mechanical:

- Aluminum Housing With Sandy White Finish
- Three 10FT Adjustable Suspension Cables
- Opal Polycarbonate Lens - Direct Down Light,
- Operating Temperature: -46°F to 104°F
- IP Rating: IP20
- 5-Year Warranty

Lighting:

- Dimmable: 0~10V Dimming
- Total Lumens: 8800LM
- Color Temperatures: 3000K/3500K/4000K
- MCTP: Multi Color Temperature and Power (Selectable, the switches are inside the Canopy)
- Color Rendering Index: CRI ≥ 80
- 50,000 Hours Rated Life
- Beam Angle: 114°(H) x 114°(V)

Applications:

- Ideal for offices, hotels, corridors, saloons, libraries, meeting rooms, conference halls, and the best solution for modern lighting solutions
- It can be used in any indoor applications

UL LISTED DIMMING 0-10V 5 YEAR

Phone: (877) 805-2252 | Fax: (877) 805-2252
www.westgatemfg.com

Photometrics: SCR-32D-MCTP-D

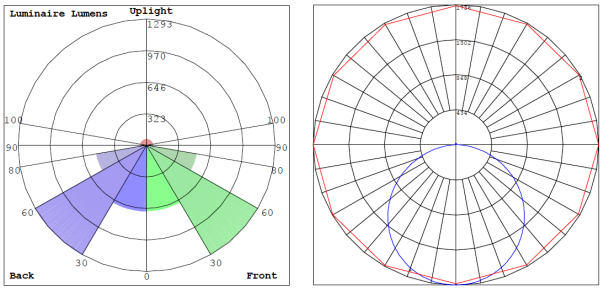

BUD Rating: B2-U3-G1

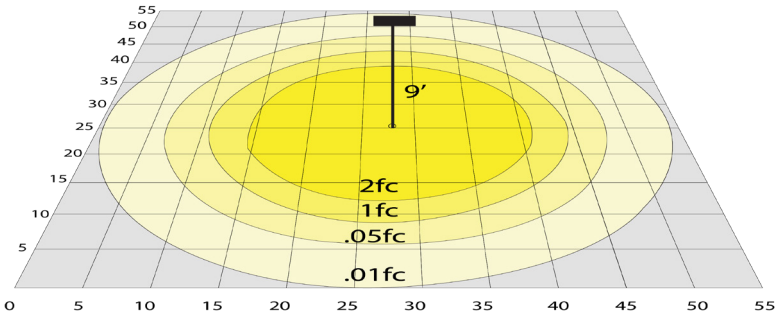

50W 4000K, Area 55'x 55' Mounting Height: 9'

Other Views:

Direct:

Side View

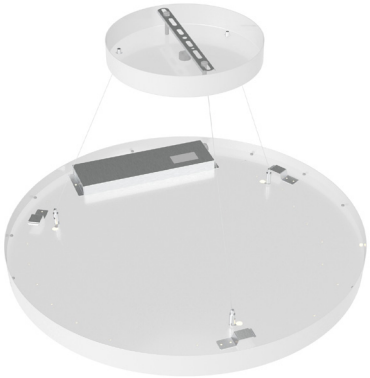

Top View

Bottom View

Performance Table: SCR-32D-MCTP-D

MODEL NO.	Wattage	Voltage	Lumens	Color Temp.	BUG Rating	LPW
SCR-32D-MCTP-D	40W 60W 80W	120~277V	4400 6600 8800	3000K 3500K 4000K	B2-U3-G1	110

Sample Ordering

Model		Size		Color Temp. Dimming		
SCR	-	32D	-	MCTP	-	D

Factory-Installed Options:

Blank = No Option For Accessories
OPT-EM-SL1INT = EMERGENCY BACKUP INTERNAL BATTERY
OPT-SEN-2US= ULTRASONIC BI-LEVEL DIMMING

FACTORY-INSTALLED OPTIONS:

OPT-SEN-2US

OPT-EM-SL1INT

Phone: (877) 805-2252 | Fax: (877) 805-2252
www.westgatemfg.com