RSL SERIES RESIDENTIAL LIGHTING

WESTGATE
THE FUTURE IS HERE...AND IT'S QUITE BRIGHT!

RSL6-JB-MCT5
SLIM SNAP-IN RECESSED LIGHTS WITH J-BOX, 5CCT
MCT5 Multi Color Temperature (Selectable)

Customer Name:
Project Name:
Note: | Type:

SLIM SNAP-IN RECESSED LIGHTS WITH J-BOX - 4" ROUND
Ideal for New As Well As Old Residential And Commercial Constructions.

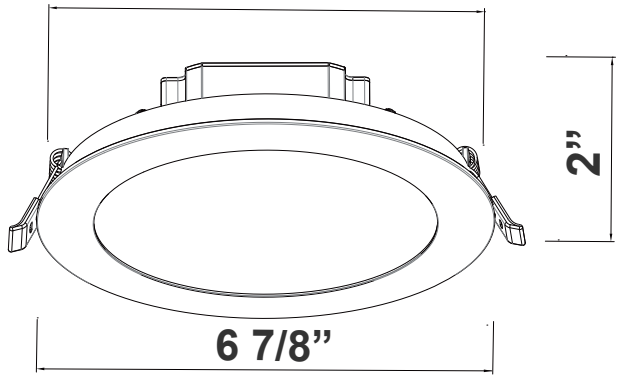

6 7/8" x 2"

Features

- 6" Smooth Recessed Trim
- Multi CCT (Selectable Switch on the Back of the driver)
- Isolated Driver for Improved Thermal Management
- 5-Year Warranty
- Spun Aluminum with White Powder Coat Finish

Technical Specifications

Electrical:

- Wattage: 12W
- Voltage: 120V AC
- Output Voltage: 36VDC
- Power Factor: >0.90
- Total Harmonic Distortion: ≤15 %
- Efficacy: 83 LPW

Mechanical:

- Two 1/2" Knockout on the Junction Box
- Up to 9 AWG18 Wires
- Die-cast Aluminum with white powder coat finish
- Pot Light Housing is Not Required Even for Insulated Ceiling
- Operating Temperature: -4°F to 104°F
- Damp Location

Lighting:

- Dimming: Dimmable Down to 10% Using a Standard TRIAC LED Dimmer
- Lens: 0.125" White Translucent Acrylic
- Can Rotate after Installation to Align
- LED: Seoul DOB (Driver On Board) Technology
- Optics: White Translucent Acrylic
- Total Lumens: 1000LM
- Color Temperatures: 2700K/3000K/3500K/4000K/ 5000K
- Multi CCT (Selectable Switch on the Back of the driver)
- Color Rendering Index: CRI ≥ 80
- Beam Angle: 100°-110°
- Rated Life: 50,000 hrs

Applications:

- LED recessed trims have been designed to be a flexible lighting solution for new construction applications, Ideal for closets, storage areas, attics, corridors, or general lighting solutions for residential and commercial applications

Phone: (877) 805-2252 | Fax: (877) 805-2252
www.westgatemfg.com

Photometrics: RSL6-JB-MCT5

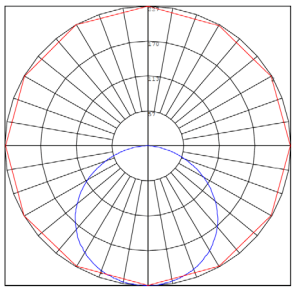

BUG Rating: B2-U1-G0

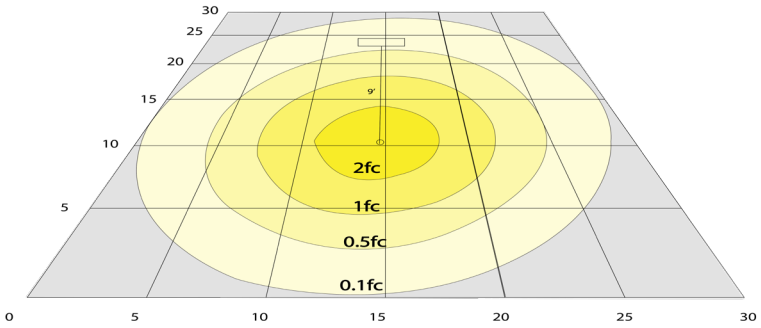

9W 5000K, Area 30'x 30' Mounting Height: 9'

Other Views:

Side View

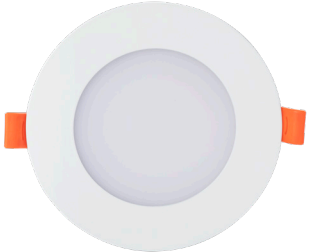

Front View

Back View

Performance Table: RSL6-JB-MCT5

MODEL NO.	Wattage	Voltage	Lumens	Color Temp.	BUG Rating	LPW
RSL6-JB-MCT5	12W	120V	1000LM	2700K	B2-U1-G0	83
				3000K		
				3500K		
				4000K		
				5000K		

Sample Ordering

Model	Style	Color Temp.
RSL6	JB	MCT5

Accessories:

Blank = No Option For Accessories
RSL-EXT-10FT-MCT = 10 FT. EXTENSION CABLE FOR USE WITH ALL SLIM LIGHT
RSL4-RI-13 = 4" ROUND ROUGH-IN PLATE, 13" LONG
RSL4-RI = 4" ROUND ROUGH-IN PLATE, 26" LONG
RSL-346-RIBH = 3", 4", 6" (ADJUSTABLE)ROUND GALVANIZED PLATE WITH BAR HANGERS
E26-CONVERTER = SCREW-IN ADAPTER THAT FITS ANY STANDARD

Factory-Installed Option:

Blank = No Option For Accessories
OPT-EM-DL1EXT = EXTERNAL BATTERY BACKUP

ACCESSORIES:

E26-CONVERTER
Includes Medium Base E-26 Screw-in Adapter That Fits Any Standard

RSL4-RI-13
4" Round Rough-in Plate, 13" Long

RSL-EXT-10FT-MCT
10 Ft. Extension Cable For use with all Slim Light

RSL-346-RIBH
3", 4", 6" (Adjustable) Round Galvanized plate with Bar Hangers

RSL4-RI
4" Round Rough-in Plate, 26" Long

FACTORY-INSTALLED OPTION:

OPT-EM-DL1EXT
EXTERNAL BATTERY BACKUP

Phone: (877) 805-2252 | Fax: (877) 805-2252
www.westgatemfg.com

Compatible Dimmer List:

MODEL NO.	BRAND
6631-1LT	LEVITON
MACL-153MLH-AL	LUTRON
TGCL-153PH-LA	LUTRON
DVW-603PGH-WH	LUTRON
CT-600PR-WH	LUTRON
LGCL-153PHL-IV	LUTRON
TGCL-153PH-LA	LUTRON
LSLV603PWV	LUTRON
6674-POW	LEVITON
DVCL-153P	LUTRON
MSCL-OP153P	LUTRON
CTCL-153P	LUTRON
MACL-153M	LUTRON
HCL453PTCCCV6	PASS & SEYMOUR
LSLV603PWV	PASS & SEYMOUR