DBEL-ACEM-HL Decorative Outdoor LED AC/Emergency Unit

Project:	
Type:	
Catalog #:	

STANDARD | *OPTIONAL*

ILLUMINATION

- *Long life, efficient, ultra bright white LED.*
- *12W (2 LEDs x 6.0 watt) per unit.*
- *Mirror-bright reflector and prismatic polycarbonate refractor.*
- *Can be used as a Normally-ON or Normally-OFF light as well as on a switched circuit.*
- *Dissipates 1286 lumens in AC mode and 350 lumens in EM mode.*

ELECTRICAL

- *Universal 120-277VAC voltage.*
- *Charge rate/power "ON" LED indicator light and push-to-test switch for mandated code compliance testing.*
- *4.8V long life, maintenance-free, rechargeable NiCd battery.*
- *Internal solid-state transfer switch automatically connects the internal battery to LED board for minimum 90-minute emergency illumination.*
- *Fully automatic solid-state, two rate charger initiates battery charging to recharge a discharged battery in 24 hours.*
- *Self-diagnostic test feature continually diagnoses units performance and tests system to ensure reliable operation and to meet electrical and life safety codes.*
- *Photocell sensor included as a standard for use as dusk-to-dawn light.*
- *Field-selectable wiring allows for AC operation of unit to be controlled using a wall-switch or a photocell or any other switching mechanism.*

MOUNTING

- *Surface mount via easy connect back plate that fits most standard size junction boxes.*
- *Universal K/O pattern on back plate for wall mount.*
- *Threaded opening at the top of the enclosure for conduit mount.*

HOUSING

- *Decorative, Low Profile, architectural design.*
- *Die-cast aluminum housing.*
- *Durable powder-coated finishes in white, black, nickel and dark bronze.*
- *Sealed and gasketed.*

OPTIONS

- *CW: Optional internal heater for extreme cold temperature applications (-30°C – 50°C).*

WARRANTY / LISTING

- *Five year warranty on all electronics and housing. Battery pro rated for five years.*
- *Meets UL924, NFPA 101 Life Safety Code, NEC, OSHA, Local and State Codes.*
- *UL Listed for wet locations (0°C – 50°C).*

DIMENSIONS

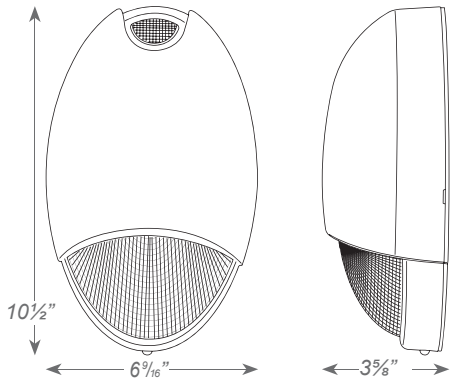

ORDERING INFORMATION

Sample Part Number: ***DBEL-ACEM-HL-BR-SDT-PC***

MODEL	HOUSING COLOR		OPTIONS					
DBEL-ACEM-HL	*W*	*White*	*SDT*	*Self-Diagnostics (standard)*	*CW*	*Cold Weather*	*PC*	*Photocell Sensor (standard)*
	B	*Black*						
	BR	*Dark Bronze*						
	N	*Nickel*						

DBEL-ACEM-HL Decorative Outdoor LED AC/Emergency Unit

Project:	
Type:	
Catalog #:	

ELECTRICAL INFORMATION

CATALOG NUMBER	INPUT WATTS (W)	INPUT AMPS (A)
DBEL-ACEM-HL SDT	2.5	0.04
DBEL-ACEM-HL SDT CW	2.8	0.026

CENTER-TO-CENTER SPACING GUIDELINES

Consult factory.

WIRING DIAGRAM

NORMALLY ON

Unit **ON** *at all times.*

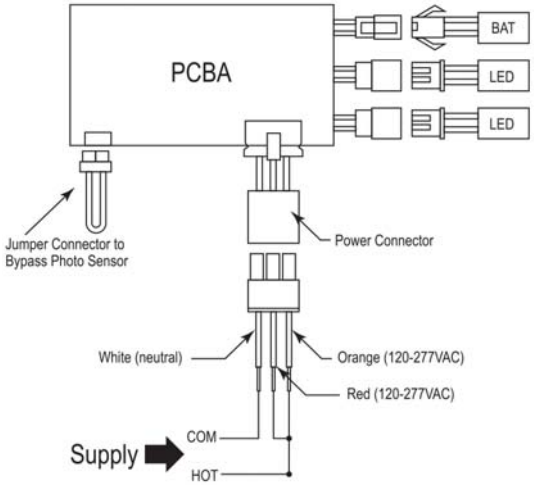

NORMALLY OFF

Unit **ON** *only in emergency mode.*

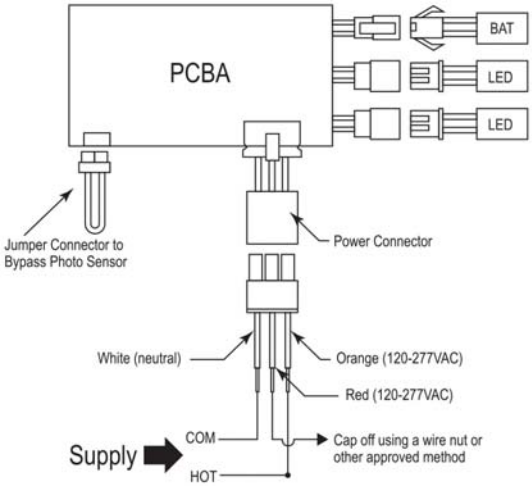

PHOTO SENSOR

Unit **ON** *when there is not enough ambient light; will automatically switch to emergency mode during a power outage.*

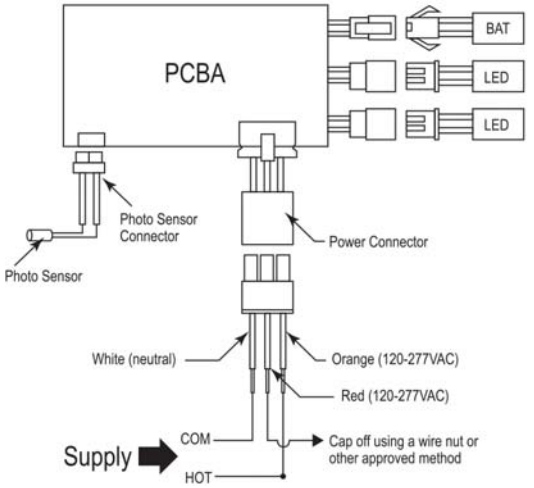

SWITCHED
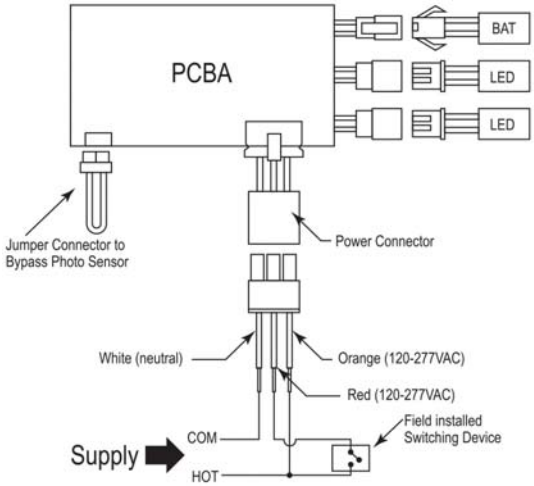
Controlled operation in AC mode; will automatically switch to emergency mode during a power outage.